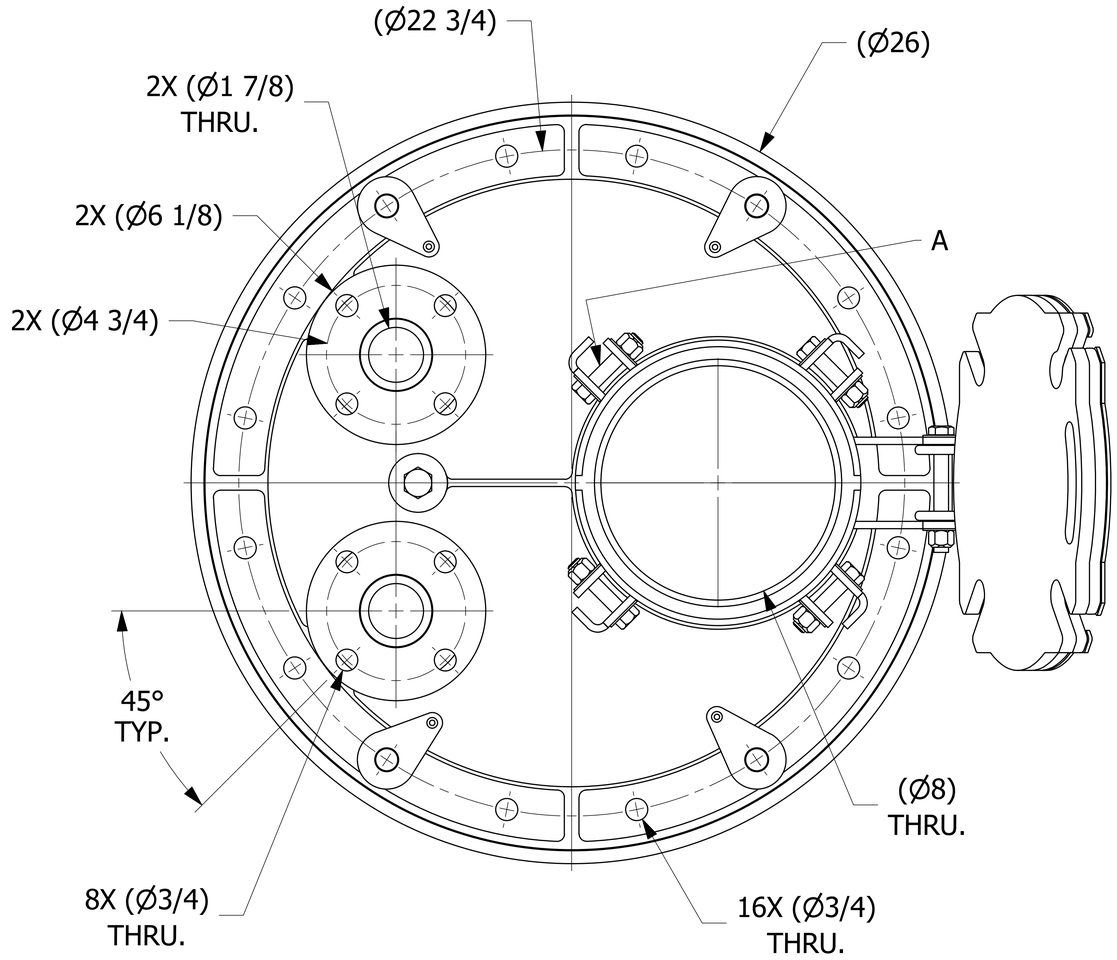

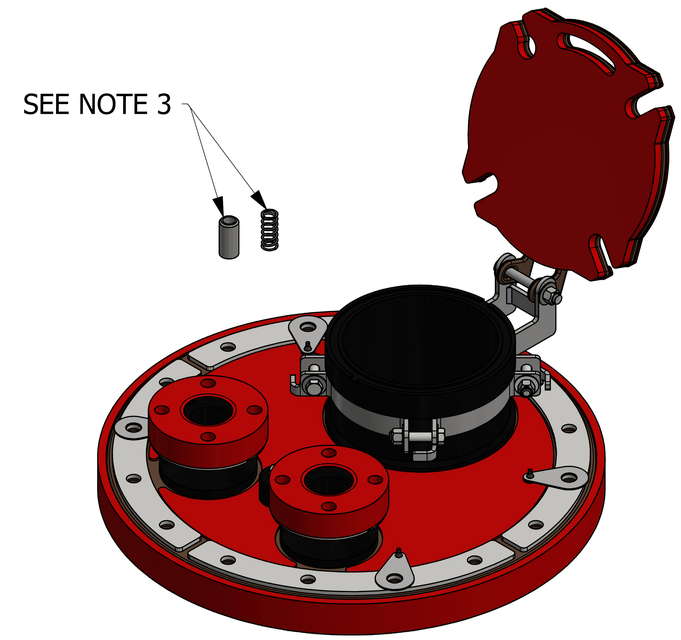

ISOMETRIC VIEW

NOTES:
1. APPROXIMATE WEIGHT IS 125 LB.
2. CLOSED HEIGHT FROM BOTTOM OF THE PLATE TO TOP OF FILL NOZZLE BUSHING COVER IS 9 1/4".
3. SPRING AND SAFETY COLLAR TO BE INSTALLED ON EYEBOLT IN LOCATION MARKED "A".
4. EYEBOLTS AND FILL NOZZLE GASKET SOLD SEPARATELY.

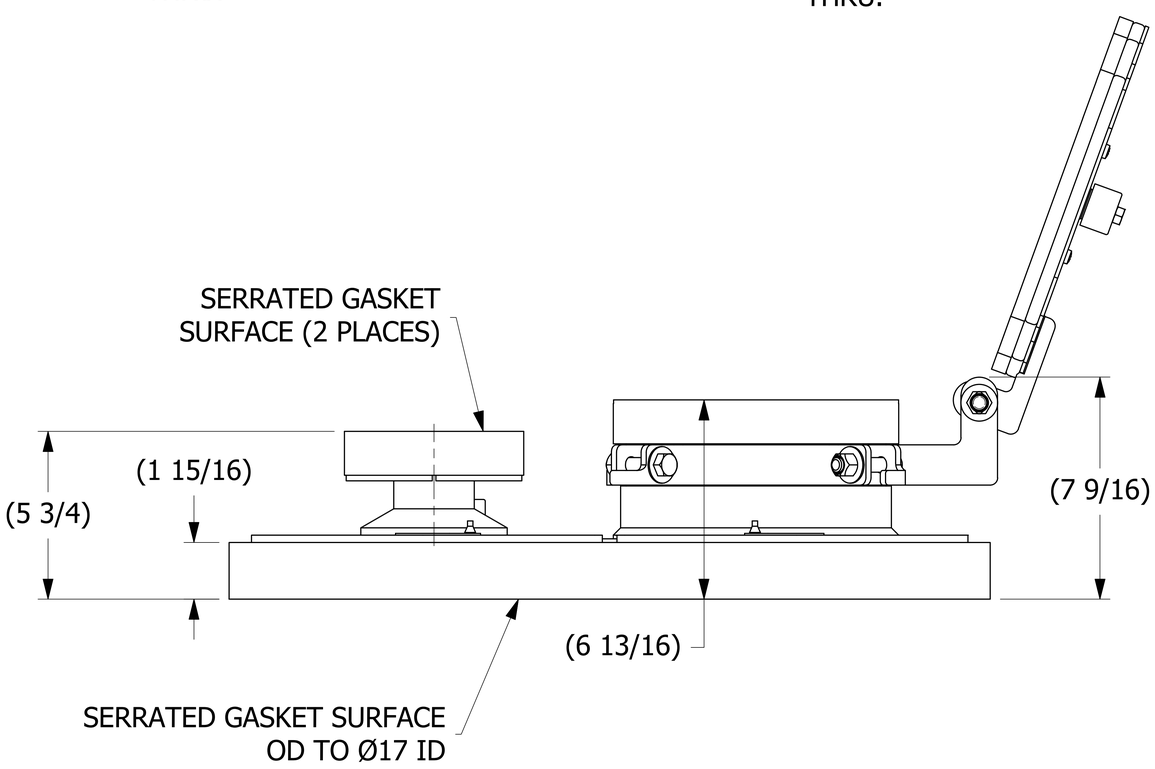

SALES DRAWING SALES DRAWING

SALES DRAWING SALES DRAWING

REV	BY	DATE	DESCRIPTION
C	CHL	9-11-18	UPDATED VIEW OF B42415, C42414 & HSFPTT1802DFUH, ADDED A47718 & E47808
B	WEB	4-10-17	REMOVED TESTING NOTE
A	TAK	3-17-17	RELEASED FOR PRODUCTION

UNLESS OTHERWISE SPECIFIED DIMENSIONAL TOLERANCES
FRACTIONAL: ±1/16
X.XX: ±.03
X.XXX: ±.015
ANGULAR: ±1°
DEBURR ALL SHARP EDGES.
ALL MACHINED SURFACES TO HAVE A 125 RMS FINISH UNLESS NOTED OTHERWISE.
THIRD ANGLE PROJECTION

DRAWN BY:	TAK
CHECKED BY:	EJF
PROTOTYPE BY:	TAK
PROTOTYPE DATE:	3/7/2016
APPROVED FOR PRODUCTION BY:	TAK
PRODUCTION DATE:	3/17/2017

SALCO PRODUCTS, INC.

PART NAME: TRUCK MANWAY 18"

MATERIAL: SALCO PE/CS/SS/PVDF

PROJECT #: 130115 | SHEET #: 1 OF 1 | SCALE: 1:2

DRAWING #: E43397 | PART #: HSFPTT1802DFUHA01

THIS PRINT, PROPERTY OF SALCO PRODUCTS INC, CONTAINS PROPRIETARY INFORMATION AND MUST NOT BE COPIED, REPRODUCED, OR USED DETRIMENTALLY TO OUR INTEREST.